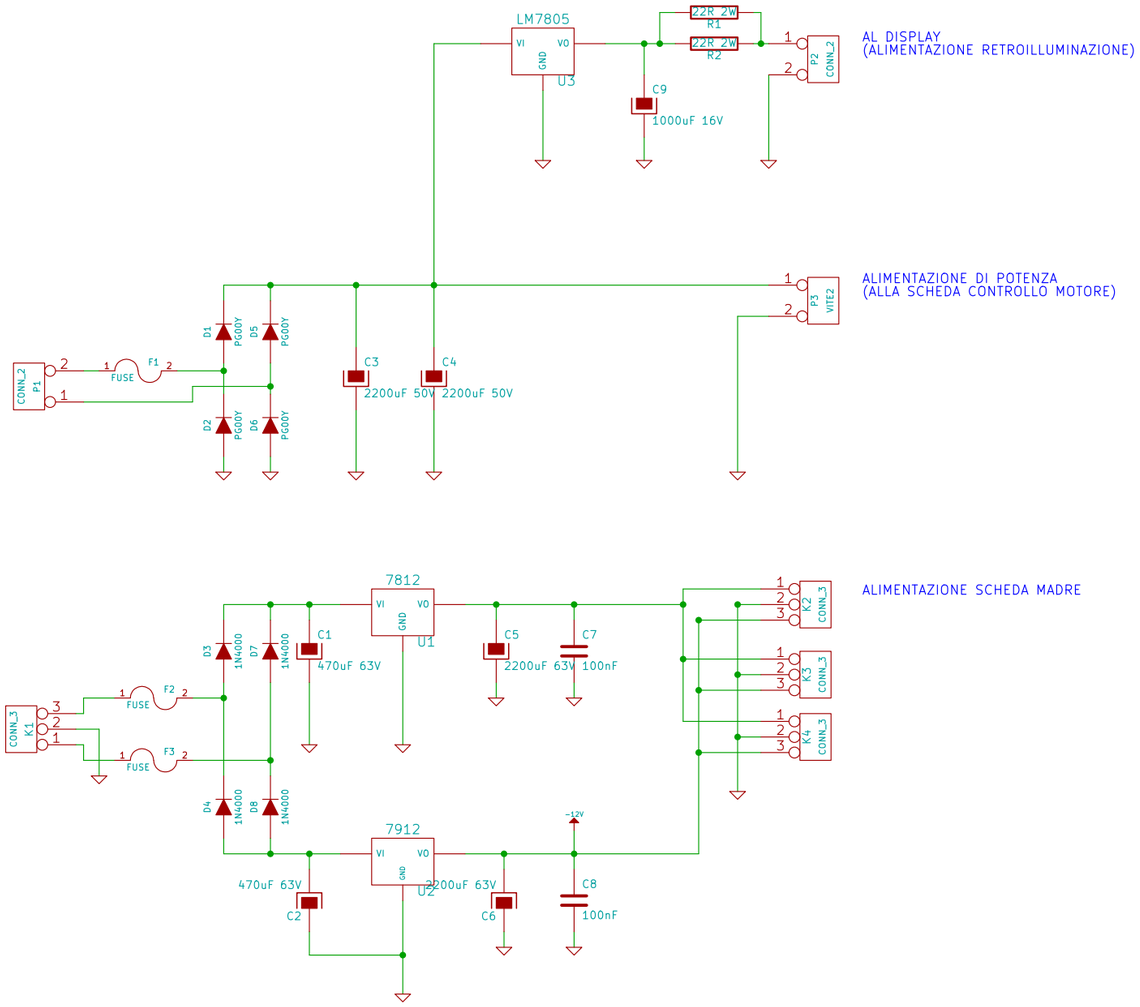

File: rotore – alimentatore rev2.sch		
Sheet: /		
Title:		
Size: A3	Date: 13 aug 2013	Rev:
KiCad E.D.A.		Id: 1/1