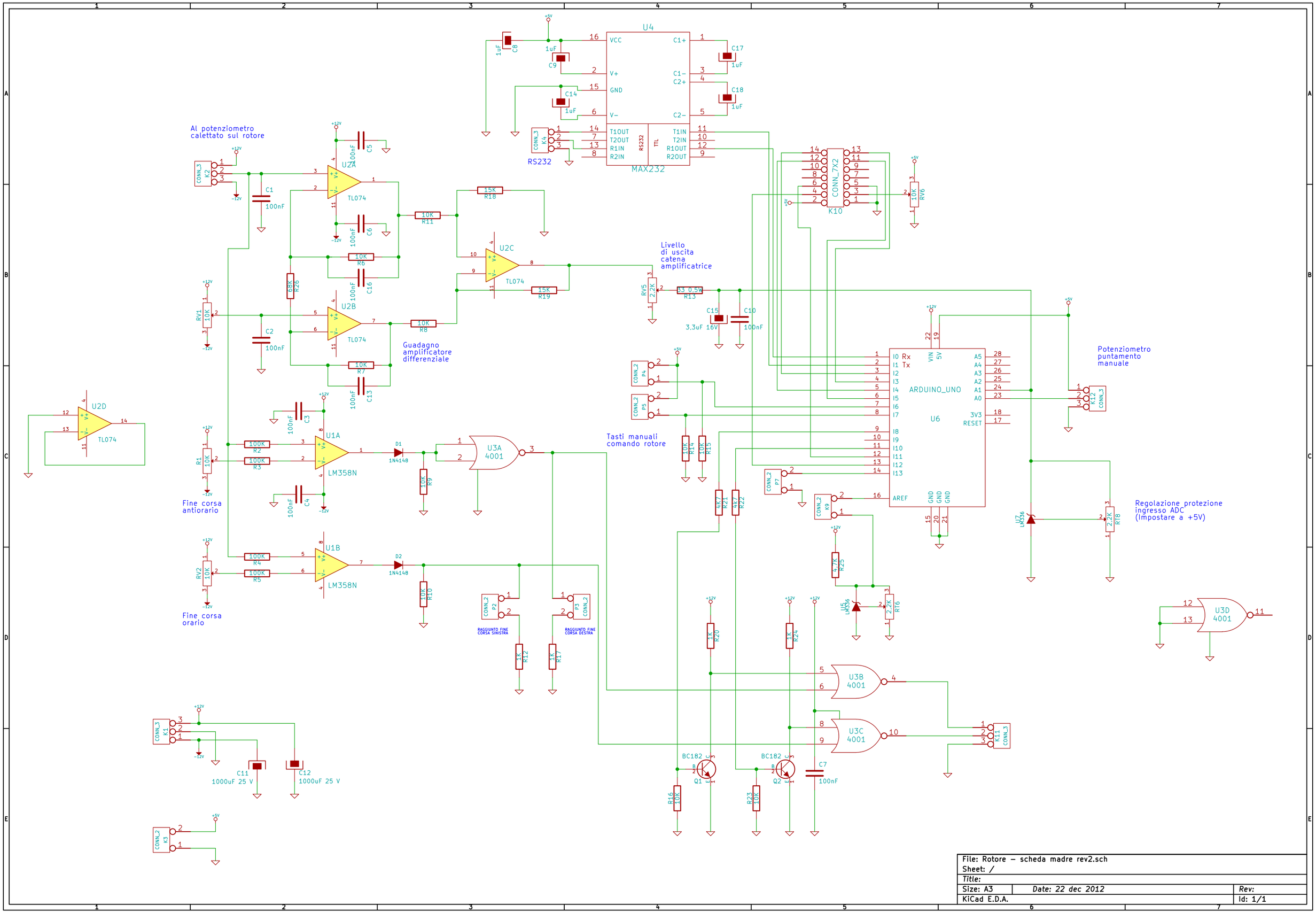

File: Rotore – scheda madre rev2.sch		
Sheet: /		
Title:		
Size: A3	Date: 22 dec 2012	Rev:
KiCad E.D.A.		Id: 1/1